# Hybrid Inverter

Installation and Operation Manual

www.aforenergy.com

Afore New Energy Technology (Shanghai) Co., Ltd.

T +86-21-54326236 F +86-21-54326136 E info@aforenergy.com

Ad Building 7, No.333 Wanfang Rd, Minhang District, Shanghai, China. 201112

Afore New Energy Technology (Shanghai) Co., Ltd.

# Contents

1. About This Manual . . . . . 1
1.1 Scope of Validity . . . . . 1
1.2 Target Group . . . . . 1

2. Safety & Symbols . . . . . 1
2.1 Safety Precautions . . . . . 1
2.2 Explanations of Symbols . . . . . 2

3. Introduction. . . . . 3
3.1 Basic Instruction . . . . . 3
3.2 Operation Modes . . . . . 3
3.2.1 Self-Use . . . . . 3
3.2.2 Time of Use . . . . . 4
3.2.3 Selling First . . . . . 6
3.2.4 Back-Up . . . . . 6

4. Installation. . . . . 7
4.1 Pre-installation . . . . . 7
4.1.1 Unpacking & Package List . . . . . 7
4.1.2 Product Overview . . . . . 8
4.1.3 Mounting Location . . . . . 9
4.2 Mounting . . . . . 11
4.3 Electrical Connection . . . . . 12
4.3.1 PV Connection . . . . . 13
4.3.2 Battery Connection. . . . . 14
4.3.2.1 BAT-CAN/RS485 . . . . . 17
4.3.3 Multi Inverter Parallel . . . . . 18
4.3.4 AC Connection . . . . . 19
4.3.5 CT or Meter Connection . . . . . 21
4.4 Communication Connection. . . . . 23
4.5 Earth Connection. . . . . 24

5. Operation . . . . . 25
5.1 Control Panel . . . . . 25
5.2 Menu Overview . . . . . 26
5.3 Control Panel . . . . . 26
5.3.1 Time & Date . . . . . 27
5.3.2 Safety . . . . . 27
5.3.3 Lithium Battery . . . . . 28
5.3.4 PV Mode . . . . . 28
5.3.5 Lead Acid . . . . . 29
5.3.6 Energy Management System (EMS Param) . . . . . 29
5.3.7 Timing of Use . . . . . 30
5.3.8 AC Charging . . . . . 31
5.3.9 Forced Charging . . . . . 31
5.3.10 Forced Discharging. . . . . 32
5.3.11 Protection Parameters . . . . . 33
5.3.12 Power grid control . . . . . 33
5.3.13 Multi-machine in Parallel . . . . . 34
5.3.14 Diesel Generator Setting (Diese1 Gen Param) . . . . . 35

6. Power ON/OFF . . . . . 35
6.1 Power ON . . . . . 36
6.2 Power OFF . . . . . 36
6.3 Restart . . . . . 36

7. Maintenance & Trouble Shooting . . . . . 36
7.1 Maintenance . . . . . 36
7.2 Trouble Shooting . . . . . 36

8. Specifications . . . . . 47

# 1.About This Manual

## 1.1 Scope of Validity

This manual mainly describes the product information, guidelines for installation, operation, maintenance and troubleshooting. And this manual applies to Afore Single Phase Hybrid Inverter.

AF4K-SLP AF4.6K-SLP AF5K-SLP AF5.5K-SLP AF6K-SLP

Please keep this manual available all the time in case of any emergency.

## 1.2 Target Group

This manual is for qualified personnel. The tasks described in this manual must only be performed by qualified personnel.

# 2.Safety & Symbols

## 2.1 Safety Precautions

1. All work on the inverter must be carried out by qualified electricians.
2. The PV panels and inverter must be connected to the ground.
3. Do not touch the inverter cover until 5 minutes after disconnecting both DC and AC power supply.
4. Do not touch the inverter enclosure when operating, keep away from materials that may be affected by high temperatures.
5. Please ensure that the used device and any relevant accessories are disposed of in accordance with applicable regulations.
6. Afore inverter should be placed upwards and handled with care in delivery. Pay attention to waterproof. Do not expose the inverter directly to water, rain, snow or spray.
7. Alternative uses, modifications to the inverter not recommended. The warranty can become void if the inverter was tampered with or if the installation is not in accordance with the relevant installation instructions.

## 2.2 Explanations of Symbols

Afore inverter strictly comply with relevant safety standards. Please read and follow all the instructions and cautions during installation, operation and maintenance.

| | |
|---|---|
| | Danger of electric shock<br>The inverter contains fatal DC and AC power. All work on the inverter must be carried out by qualified personnel only. |
| | Beware of hot surface<br>The inverter's housing may reach uncomfortably hot 60°C (140°F) under high power operation. Do not touch the inverter enclosure when operation. |
| 5 min | Residual power discharge<br>Do not open the inverter cover until 5 minutes after disconnection both DC and AC power supply. |
| | Important notes<br>Read all instructions carefully. Failure to follow these instructions, warnings and precautions may lead to device malfunction or damage. |
| | Do not dispose of this device with the normal domestic waste. |
| | Refer to manual before service. |
| CE | CE mark<br>The inverter complies with the requirements of the applicable CE guidelines. |

# 3. Introduction

## 3.1 Basic Instruction

The Afore AF-SLP series hybrid inverters are designed to increase energy independence for homeowners. Energy management is based on time-of-use and demand charge rate structures, significantly reduce the amount of energy purchased from the public grid and optimize self-consumption.

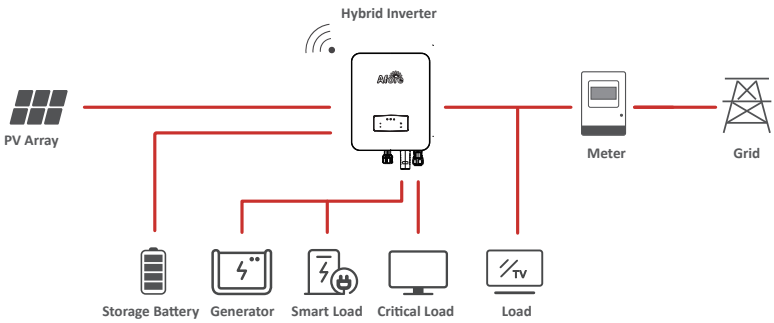


## 3.2 Operation Modes

### 3.2.1 Self-Use

The Self-Use mode is for the regions with low feed-in tariff and high electricity prices. The energy produced by the PV system is used to optimize self-consumption needs. The excess energy is used to recharge the batteries, any remaining excess is then exported to the grid.

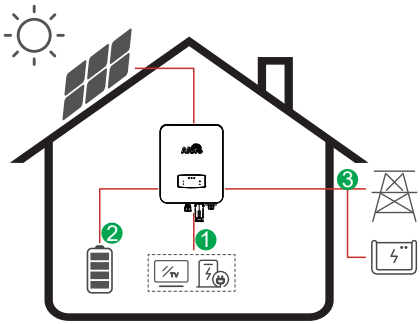

**Energy flow:**

PV → Load → Battery → Grid

**Note:** Advance Setting

When select 0 W under P_Feed menu, the inverter will export zero energy to the grid.

When select xx W under P_Feed menu, the inverter will export customized energy to the grid.

## 3.2.2 Time of Use

The Time of Use mode is designed to reward customers who do their part to reduce demand on the electric grid, particularly during peak usage periods. Use most of your electricity from PV energy and during off-peak time periods, and you could significantly lower your monthly bill.

### A. Charge Setting

**PV Charge Mode**

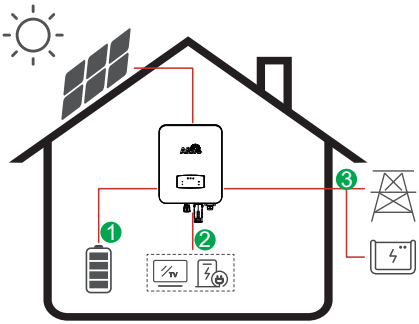


4 periods of time charge setting.

**Energy flow:**

PV → Battery → Load → Grid

**AC Charge Mode**

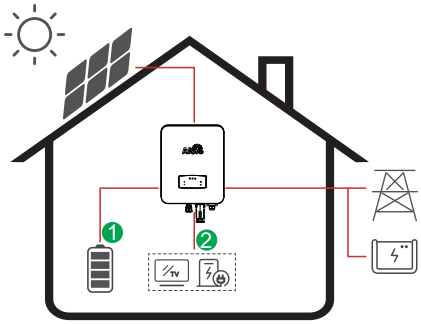


4 periods of time charge setting.

**Energy flow:**

PV and Grid → Battery → Load

**Note:**

After select AC charge, when PV have no sufficient power, AC will also charge the battery.

## B. Discharge

4 periods of time discharge setting

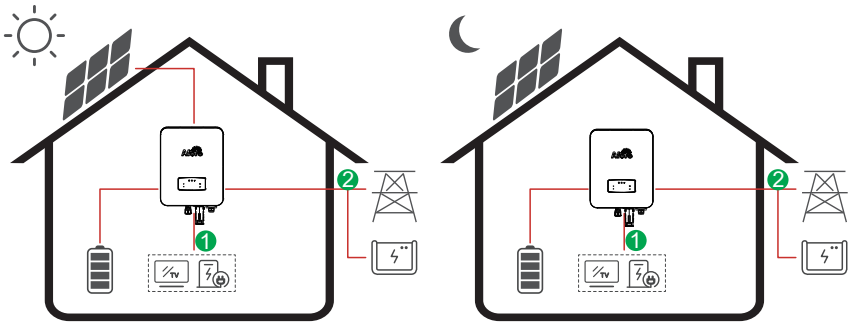

**Energy flow:** Battery and PV → Load → Grid

## C. Forbidden Discharge

4 periods of time discharge setting, the battery will be charged firstly.

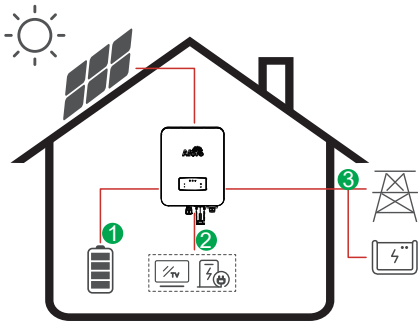

**Energy flow:**

PV → Battery → Load → Grid

### 3.2.3 Selling First

The Selling First mode is suitable for the regions with high feed-in tariff.

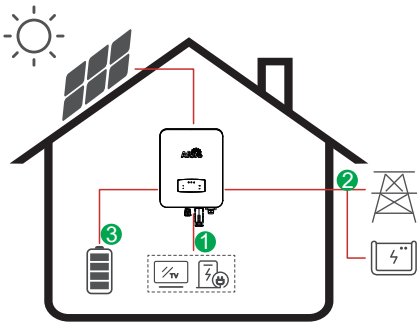

**Energy flow:**

PV → Load → Grid → Battery

### 3.2.4 Back-Up

When the grid fails, the system will automatically switch to Back-Up mode. The back-up loads can be supplied by both PV and battery energy.

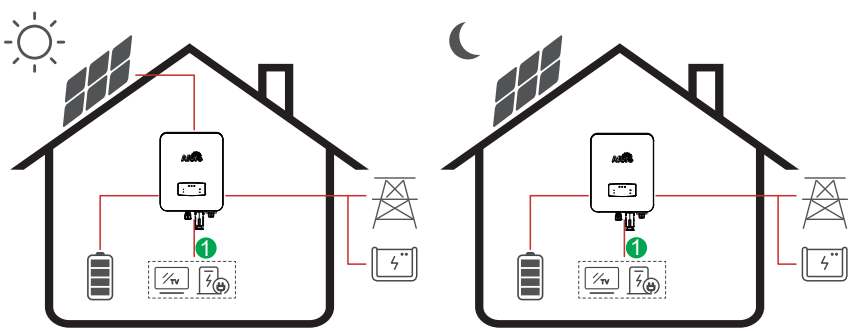

**Energy flow:** PV and Battery → Load

# 4. Installation

## 4.1 Pre-installation

### 4.1.1 Unpacking & Package List

**Unpacking**

On receiving the inverter, please check to make sure the packing and all components are not missing or damaged. Please contact your dealer directly for supports if there is any damage or missing components.

**Package List**

Open the package, please check the packing list shown as below.

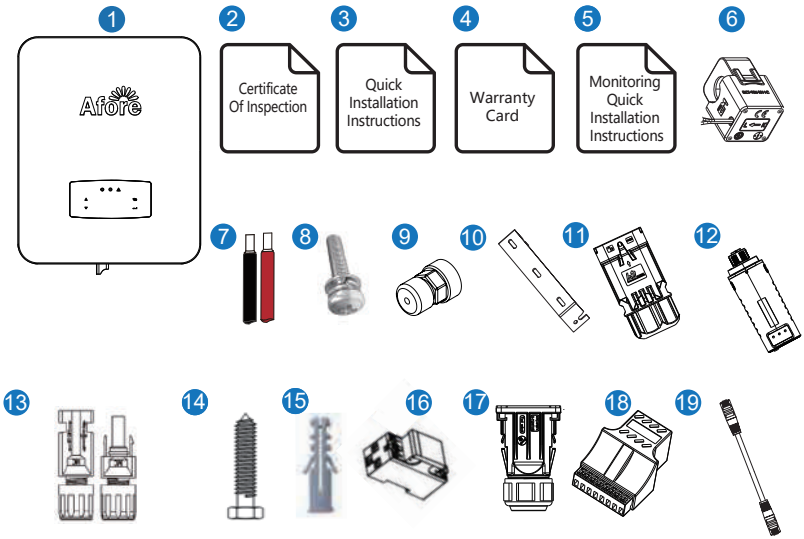

| No. | Qty | Items | No. | Qty | Items |
|---|---|---|---|---|---|
| 1 | 1 | Hybrid Inverter | 11 | 1 | Battery Connector |
| 2 | 1 | Certificate Of Inspection | 12 | 1 | Monitor Module |
| 3 | 1 | Quick Installation Instructions | 13 | 2 | DC Connector |
| 4 | 1 | Warranty Card | 14 | 3 | Mounting Bracket Screw |
| 5 | 1 | Monitoring Quick Installation Instructions | 15 | 3 | Plastic Expansion Tube |
| 6 | 1 | CT | 16 | 1 | Smart Meter (Opitional) |
| 7 | 1 | Battery wire | 17 | 1 | AC Waterproof Cover |
| 8 | 1 | Security Screw | 18 | 1 | Communication Adapter |
| 9 | 3 | Communication Connectors | 19 | 2 | Communication T568B |
| 10 | 1 | Wall Mounting Bracket | | | |

**Note:**
Using the Communication Adapter when Multi Inverter Parallel.

## 4.1.2 Product Overview

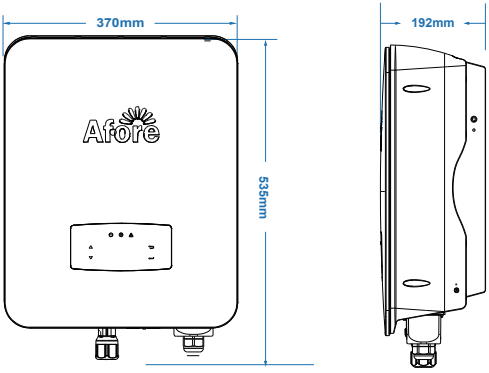

**Inverter Terminals**

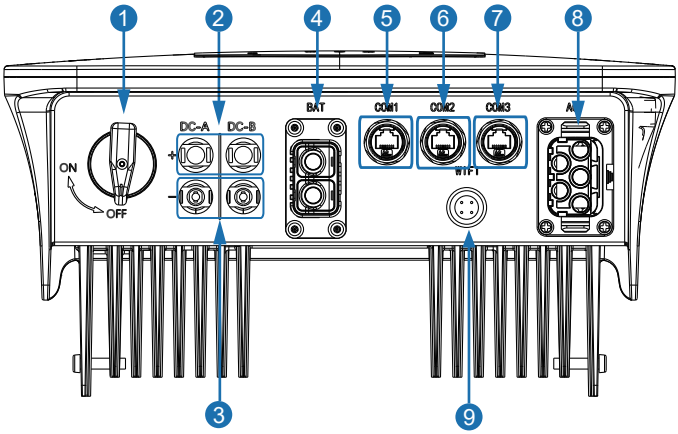


| No. | Items | No. | Items |
|---|---|---|---|
| 1 | DC Switch | 6 | CT/Meter Communication Port |
| 2 | DC Connectors ( + ) For PV Strings | 7 | BAT Communication Port |
| 3 | DC Connectors ( − ) For PV Strings | 8 | AC Port & EPS Port |
| 4 | Battery Port | 9 | Monitor Module Port |
| 5 | Generator Communication Port | | |

## 4.1.3 Mounting Location

The inverters are designed for indoor and outdoor installation (IP65), to increase the safety, performance and lifespan of the inverter, please select the mounting location carefully based on the following rules:

• The inverter should be installed on a solid surface, far from flammable or corrosion materials, where is suitable for inverter's weight and dimensions.
• The ambient temperature should be within -25℃ ~ 60℃ (between -13 °F and 140°F).
• The installation of inverter should be protected under shelter. Do not expose the inverter to direct sunlight, water, rain, snow, spray lightning, etc.

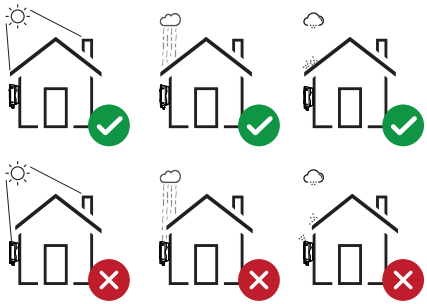

• The inverter should be installed vertically on the wall, or lean back on plane with a limited tilted angle.

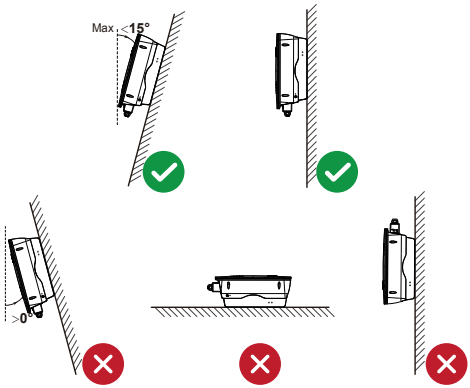


• Leave the enough space around inverter, easy for accessing to the inverter, connection points and maintenance.

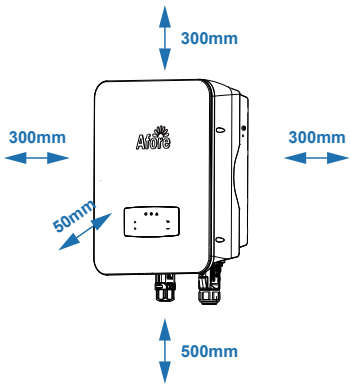

## 4.2 Mounting

Step 1

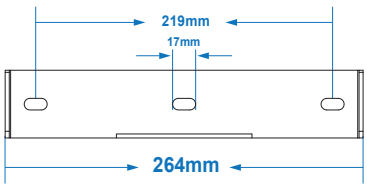


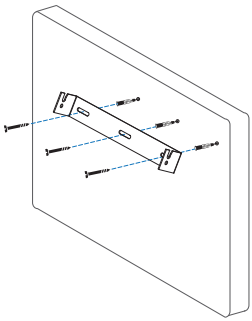

Step 2

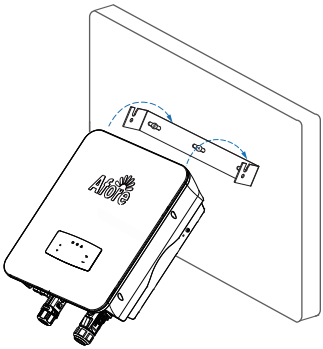

Step 3

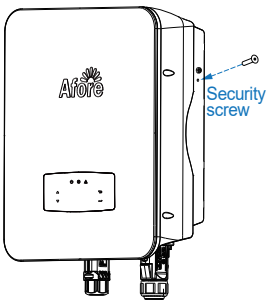


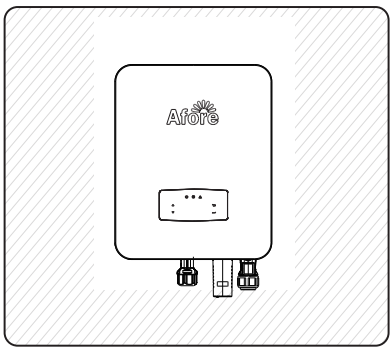

## 4.3 Electrical Connection

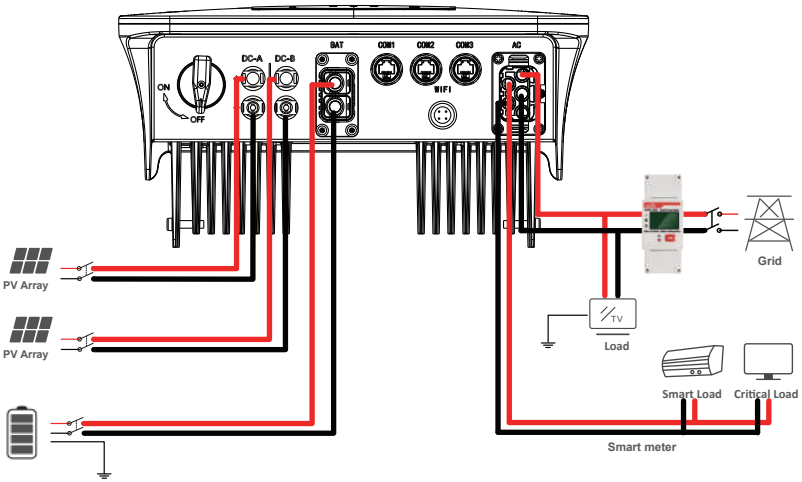


### Communication Adapter pin assignment

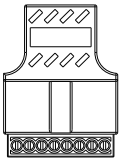


| No. | COM1 | COM2 | COM3 |
|---|---|---|---|
| 1 | +3_3V | 485-A | SGND |
| 2 | DRM1/5 | 485-B | TEP |
| 3 | DRM2/6 | +5VS | 485-A2 |
| 4 | DRM3/7 | CTW | CANH_BAT1 |
| 5 | DRM4/8 | CTN | CANL_BAT1 |
| 6 | DRM0 | GEN | 485-B2 |
| 7 | SELV12 | CT_U | BAT-485-A |
| 8 | RPSD | CT_N | BAT-485-B |

**Note:**

For diesel generators or multi-machine parallel use, please contact the manufacturer, and provide installation and operation instructions separately.

## 4.3.1 PV Connection

The AF-SLP series hybrid inverter has one/two MPPT channels, can be connected with one/two strings of PV panels. Please make sure below requirements are followed before connecting PV panels and strings to the inverter:

• The open-circuit voltage and short-circuit current of PV string should not exceed the reasonable range of the inverters.
• The isolation resistance between PV string and ground should exceed 300 kΩ.
• The polarity of PV strings are correct.
• Use the DC plugs in the accessory.
• The lightning protector should be equipped between PV string and inverter.
• Disconnect all of the PV (DC) switch during wiring.

**Warning:**
The fatal high voltage may on the DC side, please comply with electric safety when connecting.
Please make sure the correct polarity of the cable connected with inverter, otherwise inverter could be damaged.

Step 1

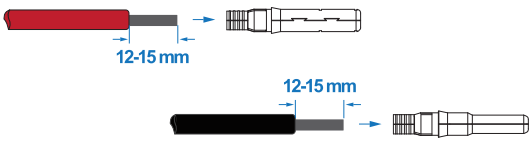


**Note:**
PV cable suggestion
Cross-section
4mm²

Step 2

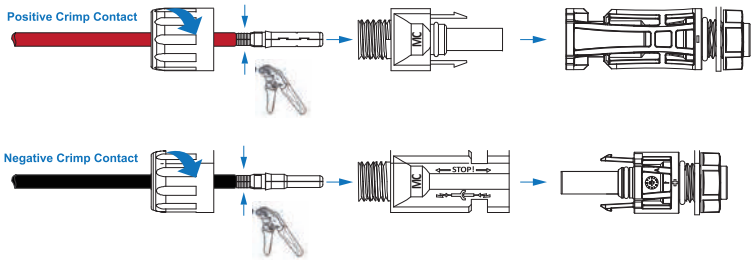


**Note:**
Please use PV connector crimper to pinch the point of the arrow.

**Note:**
You'll hear click sound when the connector assembly is correct.

Step 3

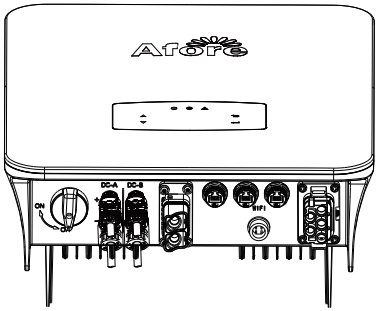


## 4.3.2 Battery Connection

AF-SLP series hybrid inverters are compatible with lithium battery. For lead acid battery or batteries with other brands, please confirm with local distributor or Afore for technical support.

**Note:**
Set battery type and manufacturer, please refer to Chapter 5.3.
BMS(Battery Management System)communication is needed between inverter and battery.

Step 1

Rotate counterclockwise and remove mounting bracket screw nut.

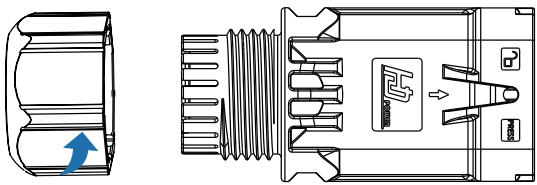

Step 2

Pass the battery wire with the correct polarity through the nut and installation bracket.

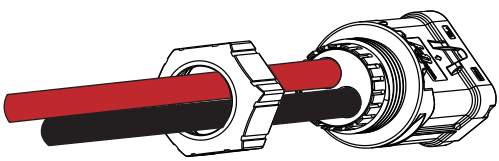

**Note:**

Battery cable suggestion Cross - section 4 AWG

Please make sure the battery polarities are correct.

Step 3

Insert the battery wire into the corresponding terminal and lock it with a hexagon wrench.

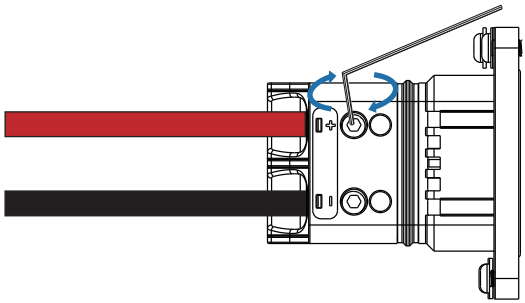

Step 4

Insert the battery connector into the inverter, if hear a “click”, it means the battery connection is finished.

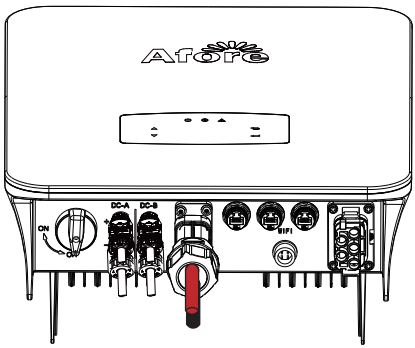

### 4.3.2.1 BAT-CAN/RS485

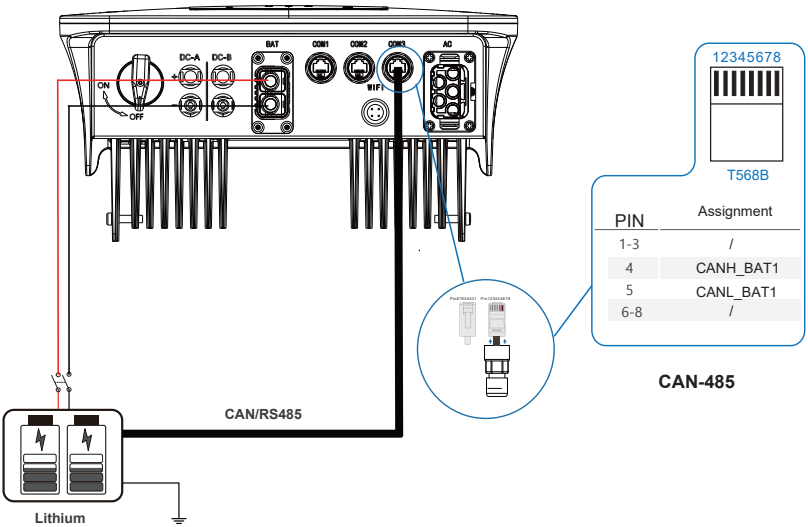


| PIN | Assignment |
|---|---|
| 1-3 | / |
| 4 | CANH_BAT1 |
| 5 | CANL_BAT1 |
| 6-8 | / |

**CAN-485**

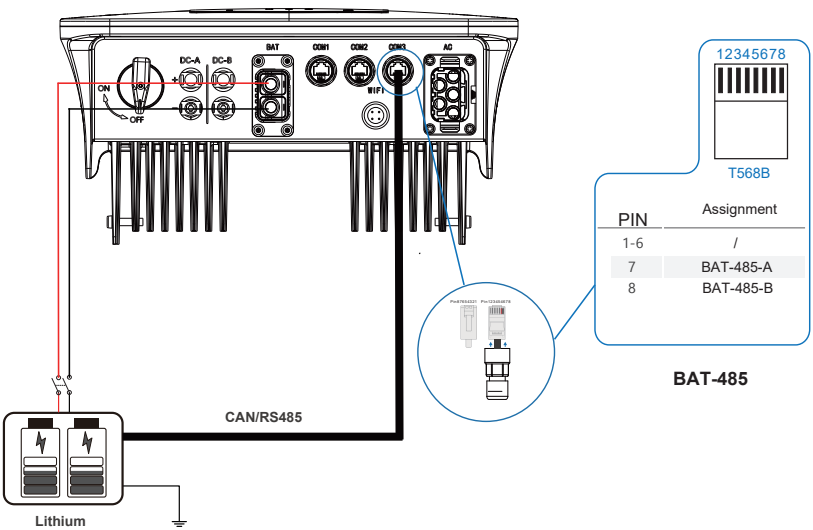


| PIN | Assignment |
|---|---|
| 1-6 | / |
| 7 | BAT-485-A |
| 8 | BAT-485-B |

**BAT-485**

## 4.3.3 Multi Inverter Parallel

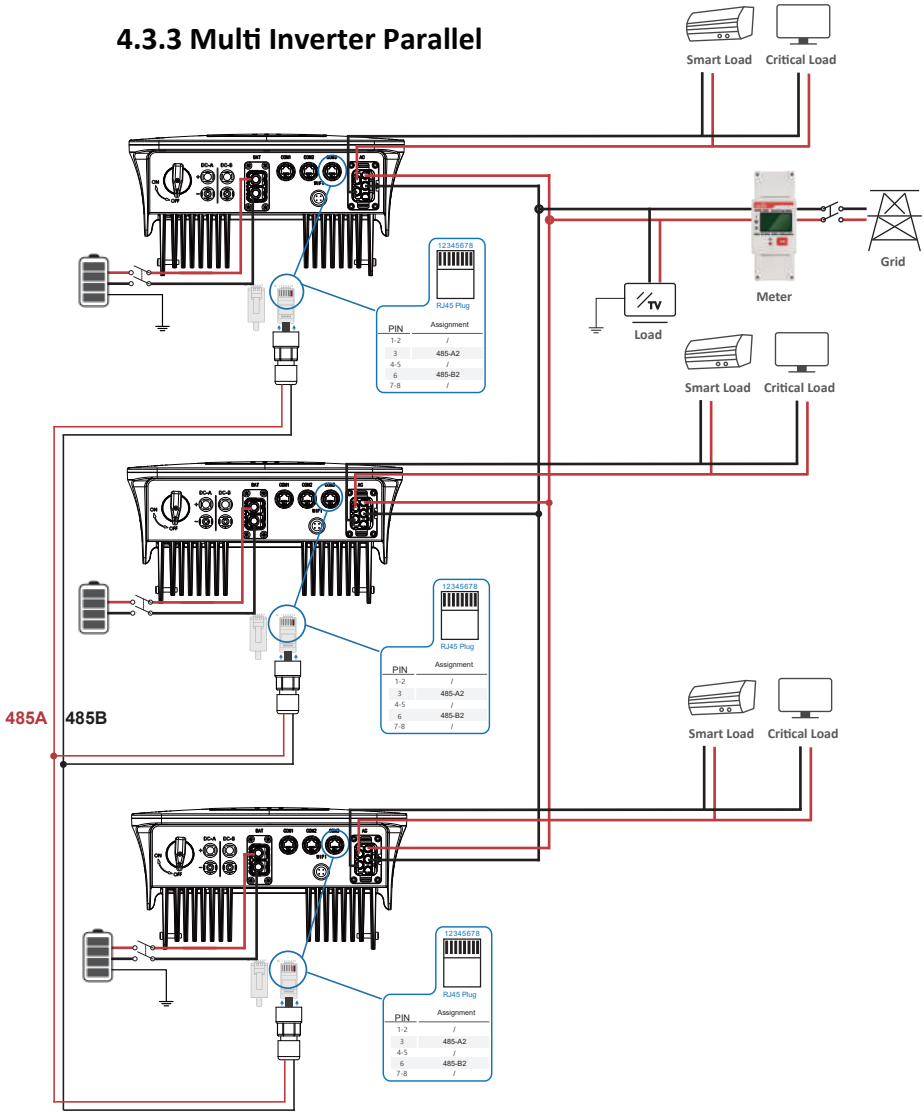


**Note:**

The meter only communicates with the host and does not communicate with the machine. Refer to chapters 4.3.5.

## 4.3.4 AC Connection

The AC terminal contains “GRID” and “EPS”, GRID for load, and EPS for emergency load.

Before connecting, a separate AC breaker between individual inverter and AC input power is necessary. This will ensure the inverter be securely disconnected during maintenance and fully protected from current of AC input.

An extra AC breaker is needed for On-Grid connection to be isolated from grid when necessary. Below are requirements for the On-Grid AC-breaker.

| Inverter Model | AC breaker specification |
|---|---|
| AF4-6K-SLP | 63A/200V/230V AC breaker |

**Note:**
Qualified electrician will be required for the wiring.

| Model | Wire Size | Cable（mm²） | Torque value |
|---|---|---|---|
| 4-6kW | 8-10AWG | 4-6 | 1.2N·m |

**Please follow steps for AC connection**

• Connect breaker first before connecting.
• emove insulation sleeve 11mm(0.5 inch) length, unscrew the bolts, insert the AC input wires according to polarities indicated on the terminal block and tighten the terminal screws.

Step 1

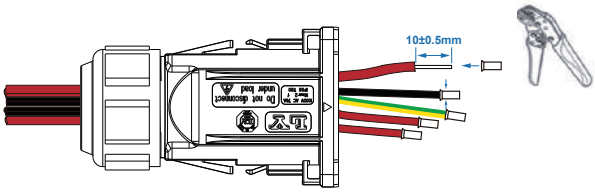

**Note:**
The wiring terminals should be wrapped with insulation tape, otherwise it will cause a short circuit and damage the inverter.

**Note:**
The Max. power load connects to EPS port should not exceed the inverter's EPS Max. output power range.

Step 2

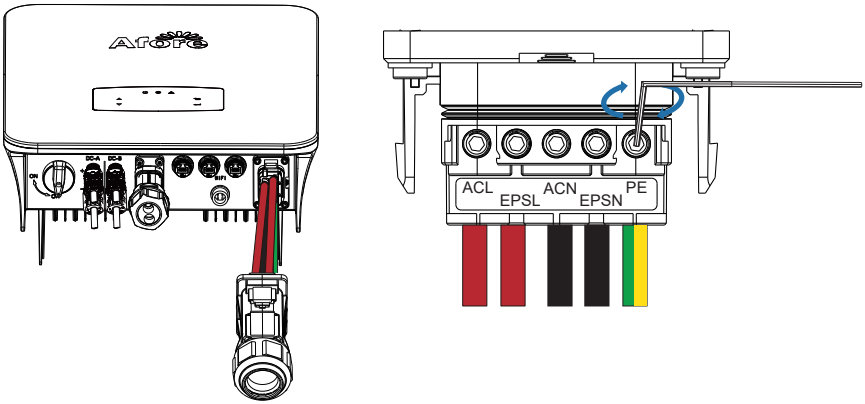


Step 3

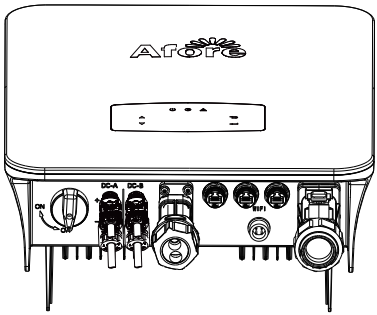

## 4.3.5 CT or Meter Connection

Meter and a current sensor(CT for short below) are used to detect current power direction of the local load and the grid. The output control function of the inverters will be activated based on the detected data.

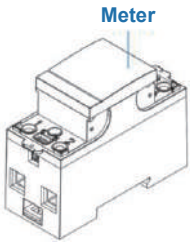


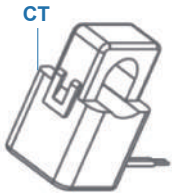


### Install the CT

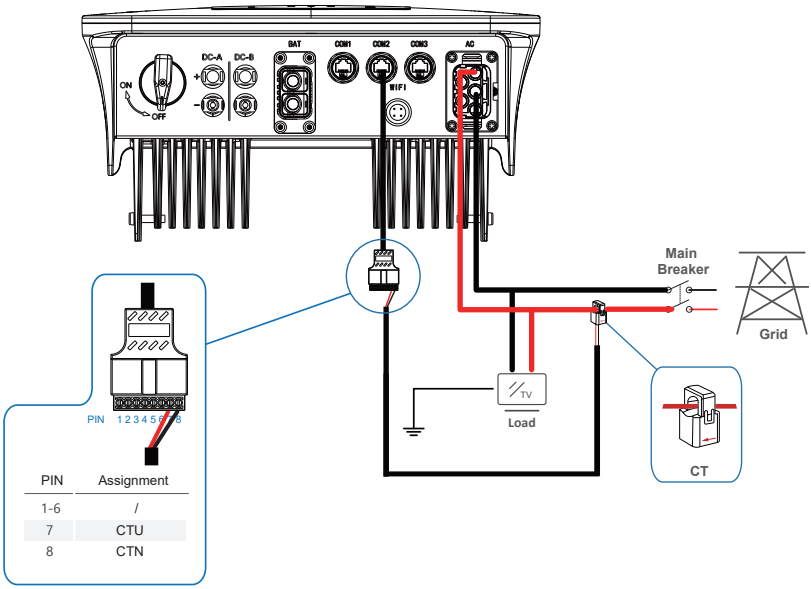


| PIN | Assignment |
|---|---|
| 1-6 | / |
| 7 | CTU |
| 8 | CTN |

CT1

## Install the Meter

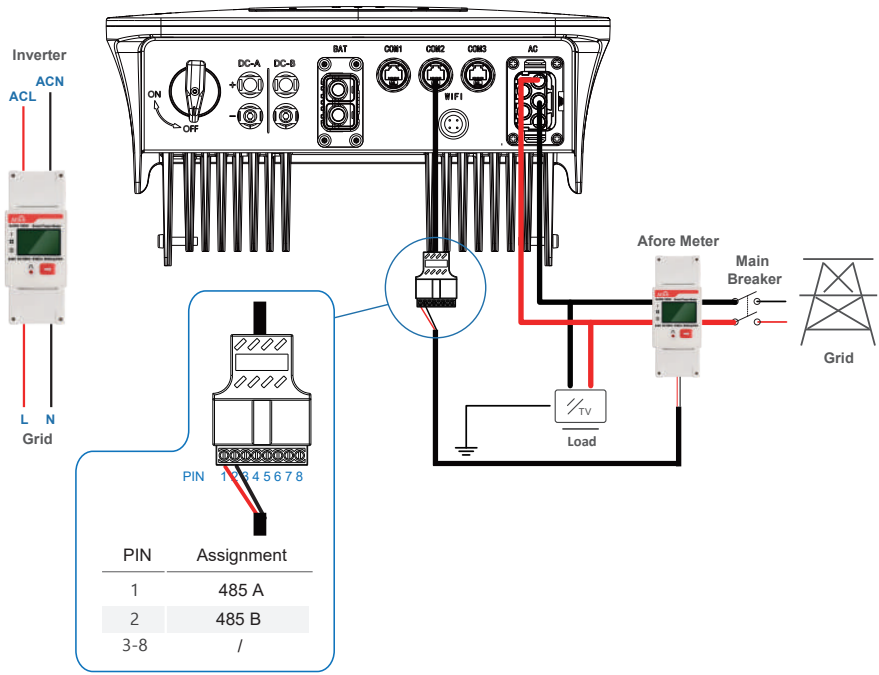


| PIN | Assignment |
|---|---|
| 1 | 485 A |
| 2 | 485 B |
| 3-8 | / |

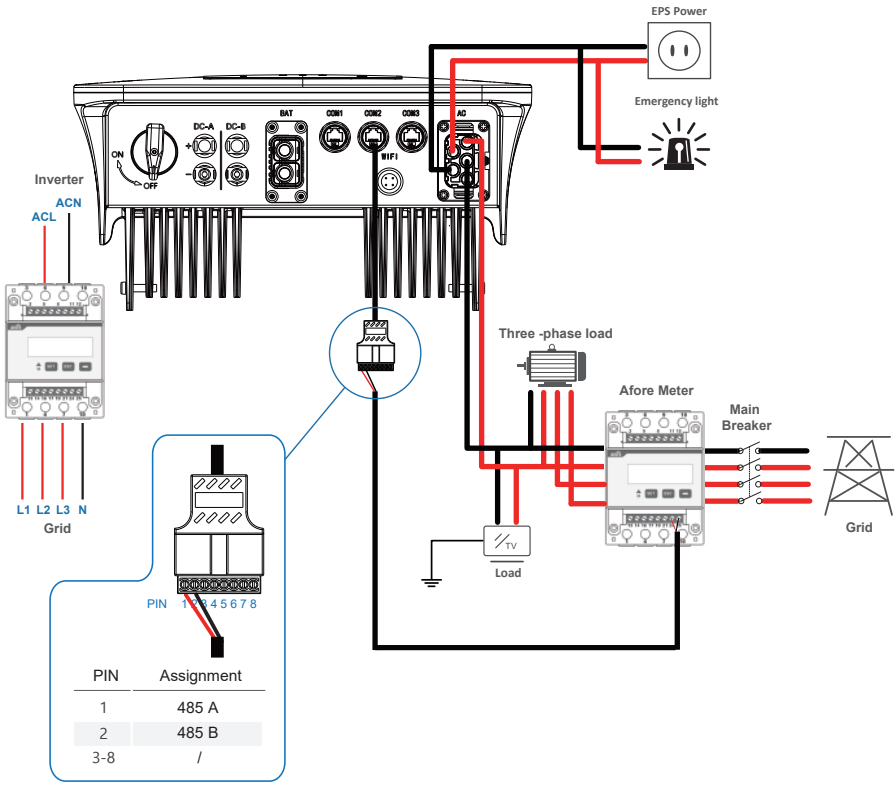


## 4.4 Communication Connection

The monitoring module could transmit the data to the cloud server, and display the data on the PC, tablet and smart-phone.

### Install the WIFI / Ethernet / GPRS / RS485 Communication

WIFI / Ethernet / GPRS / RS485 communication is applicable to the inverter. Please refer to "Communication Configuration Instruction" for detailed instruction.

Step 1

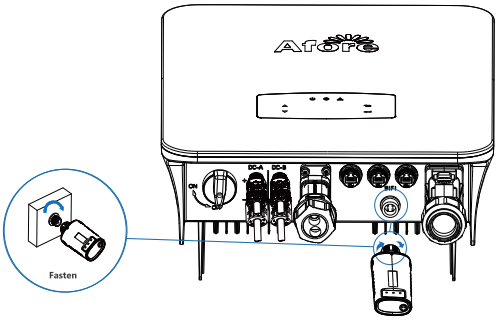


Step 2

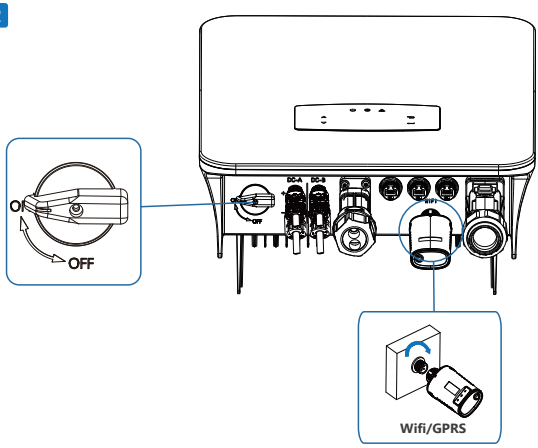


Turn on the DC switch and AC circuit breaker, and wait until the LED indicator on the monitoring module flashes, indicating that the monitoring module is successfully connected.

# 5. Operation

## 5.1 Control Panel

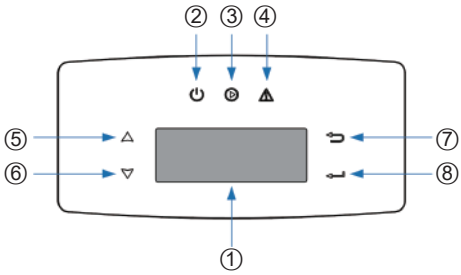


| No. | Items | No. | Items |
|---|---|---|---|
| 1 | LCD Display | 5 | **UP** Touch Button |
| 2 | **POWER** LED Indicator | 6 | **DOWN** Touch Button |
| 3 | **GRID** LED Indicator | 7 | **BACK** Touch Button |
| 4 | **FAULT** LED Indicator | 8 | **ENTER** Touch Button |

**Note:**
Hold UP/DOWN button can be rolling quickly.

| Sign | Power | Color | Explanation |
|---|---|---|---|
| **POWER** | ON | Green | The inverter is stand-by |
| | OFF | | The inverter is power off |
| **GRID** | ON | Green | The inverter is feeding power |
| | OFF | | The inverter is not feeding power |
| **FAULT** | ON | Red | Fault occurred |
| | OFF | | No fault |

## 5.2 Menu Overview

AF-SLP hybrid inverter has a LCD for clearly operating, and menu of the LCD can be presented as following:

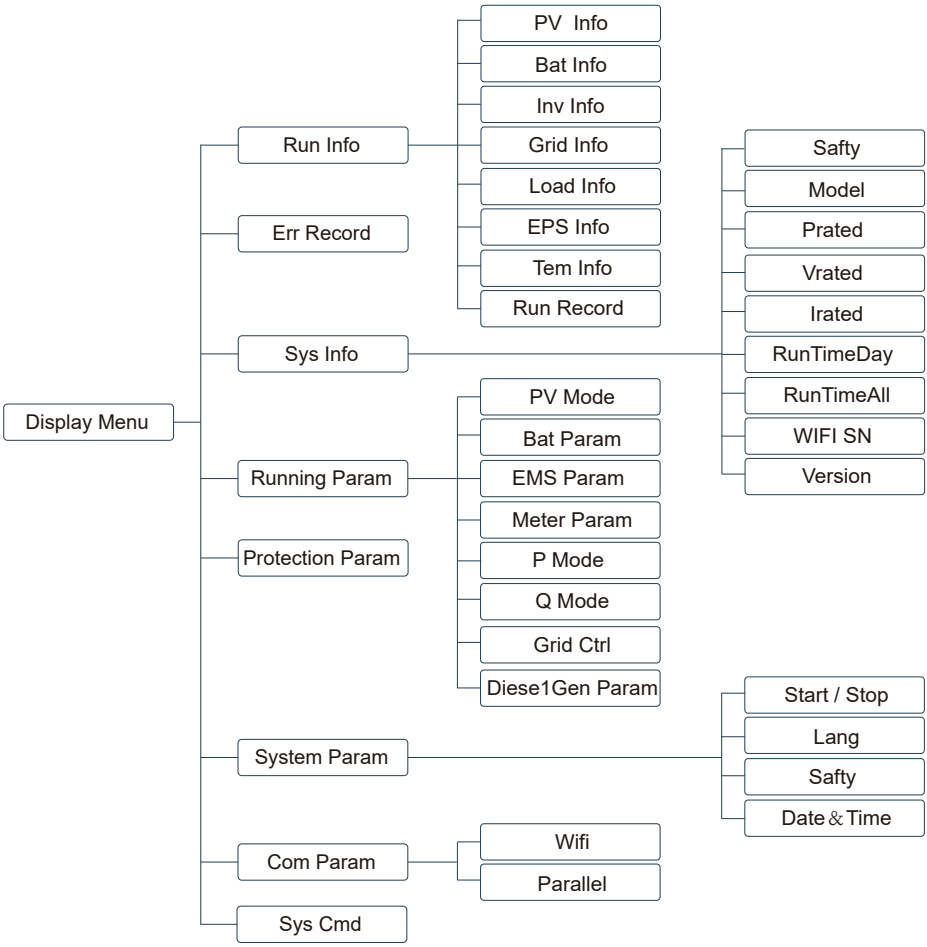


## 5.3 Inverter Setting

The setting is for AF-SLP Hybrid inverter. Any doubts, please contact distributor for more details.

### 5.3.1 Time & Date

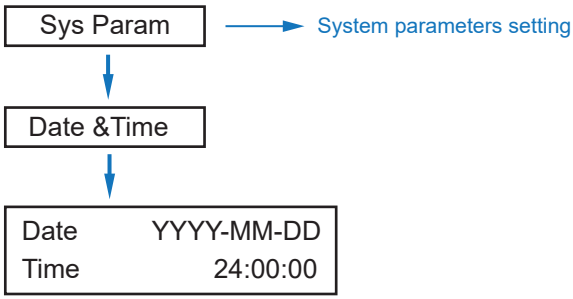


### 5.3.2 Safety

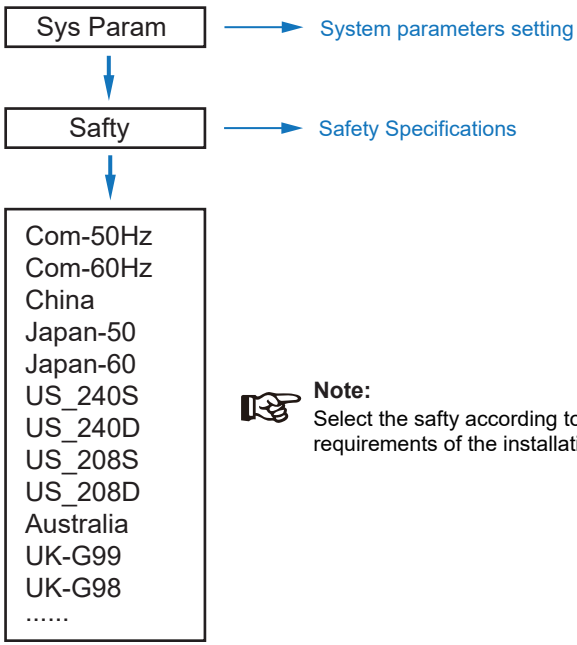


**Note:**
Select the safty according to the requirements of the installation site.

### 5.3.3 Lithium Battery

Run Param → Operating parameters setting

↓

* * * * → 5 4 3 2

↓

Bat Param

↓

Lithium

↓

Afore
Aoboet
ApoLLo
BYD
CALB
Dyness
.....

**Note:**
Please select the right battery frand to your use.

### 5.3.4 PV Mode

Run Param → Operating parameters setting

↓

* * * * → 5 4 3 2

↓

PV Mode

↓

NoPV
Independent
Parallel

→ 1. No PV connection
2. “Independent” and “Parallel” setting for professional installers.

### 5.3.5 Lead Acid

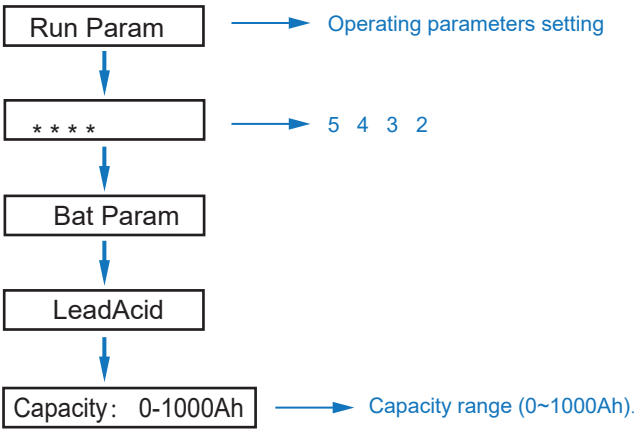


### 5.3.6 Energy Management System (EMS Param)

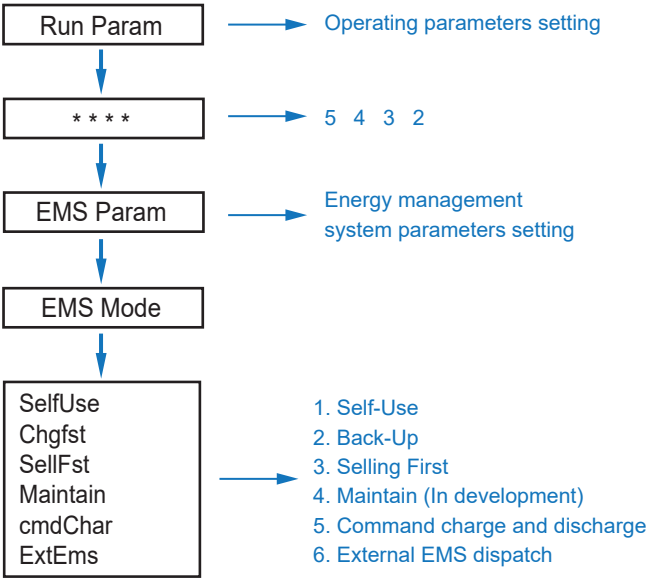


**Note:**
For detailed introduction of each mode, please refer to chapter 3.2 of the user manual.

### 5.3.7 Time of Use

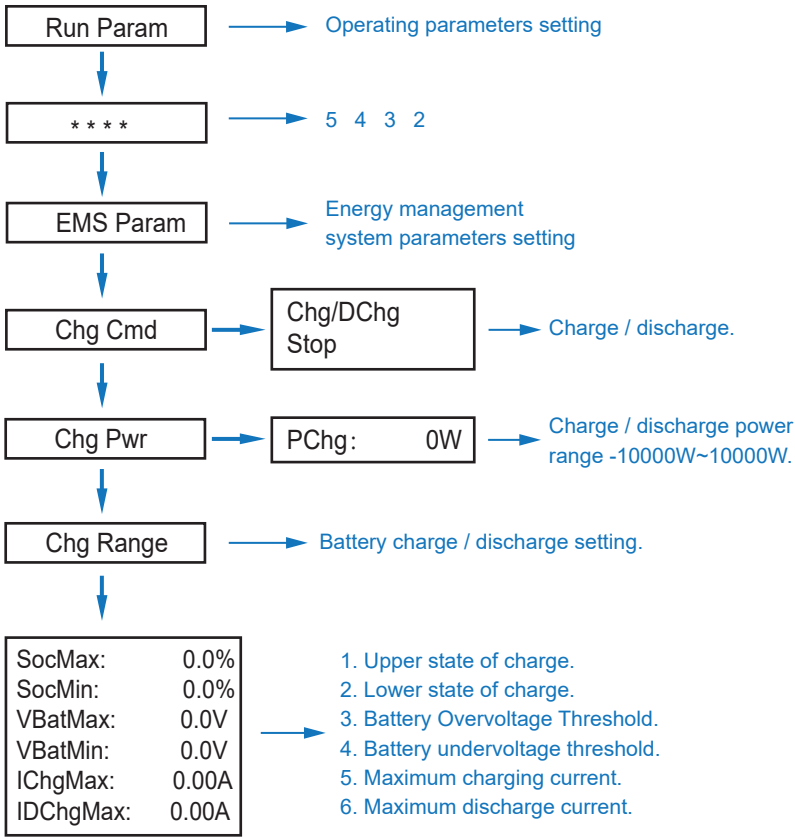


**Note:**
Timed charge and discharge need to complete the three settings of "Chg Cmd", "Chg Pwr" and "Chg Range", otherwise it will not work properly.

### 5.3.8 AC Charging

Run Param → Operating parameters setting

↓

* * * * → 5 4 3 2

↓

EMS Param → Energy management system parameters setting

↓

AC Chg → AC charging

↓

| | |
|---|---|
| ACChg: | OFF |
| MaxPpct: | 0.0% |
| MaxSoc: | 0.0% |
| TimOn1: | 00:00 |
| TimOff1: | 00:00 |
| TimOn2: | 00:00 |
| TimOff2: | 00:00 |
| TimOn3: | 00:00 |
| TimOff3: | 00:00 |

→

1. ACChg — AC charging enable.
2. MaxPpct — AC charging Percentage.
3. MaxSoc — AC charging maximum Soc.
4. TimOff1 — AC charging start time1.
5. TimOn2 — AC charging end time 1.
6. AC charging can be set up to three time periods.

### 5.3.9 Forced Charging

Run Param → Operating parameters setting

↓

* * * * → 5 4 3 2

↓

EMS Param → Energy management system parameters setting

↓

Force Chg → Forced charging

| | |
|---|---|
| ForceChg: | ON |
| PForce: | 0.0% |
| MaxSoc: | 0.0V |
| TimOn1: | 00:00 |
| TinOff1: | 00:00 |
| TimOn2 : | 00:00 |
| TinOff2: | 00:00 |
| TimOn3: | 00:00 |
| TinOff3: | 00:00 |

1. ForceChg — Force charging enable.
2. PForce — Forced charging power percentage.
3. MaxSoc — Forced charging Max Soc.
4. TimOn1 — Forced charging start time 1.
5. TimOff2 — Forced charging end time 1.
6. Forced charging can be set to three time periods .

## 5.3.10 Forced Discharging

Run Param → Operating parameters setting

* * * * → 5 4 3 2

EMS Param → Energy management system parameters setting

Force DChg → Forced discharge

| | |
|---|---|
| ForceDChg: | ON |
| PForce: | 0.0% |
| MinSoc: | 0.0V |
| TimOn1: | 00:00 |
| TinOff1: | 00:00 |
| TimOn2: | 00:00 |
| TinOff2: | 00:00 |
| TimOn3: | 00:00 |
| TinOff3: | 00:00 |

1. ForceDChg — Forced discharging enable.
2. PForce — Forced discharging power percentage.
3. MinSoc — Forced discharging max Soc.
4. TimOn1 — Forced discharging start time 1.
5. TinOff1 — Forced discharging end time 1.

**Note:**
Forced discharging can be set to three time periods.

## 5.3.11 Protection Parameters

Run Param → Operating parameters setting

* * * * → 5 4 3 2

| | |
|---|---|
| IsoChk | ON |
| GfciChk | ON |
| EarthChk | ON |
| V.max | 0.0V |
| V.maxT | 0.00S |
| V.min | 0.0V |
| V.minT | 0.00S |
| F.max | 0.00Hz |
| F.maxT | 0.00S |
| F.min | 0.00Hz |
| F.minT | 0.00S |
| ISO.min | 0KΩ |
| T.conn | 0S |
| T.Reconn | 0S |
| RSSEN | ON |

1. Insulation resistance detection
2. Leakage current detection
3. Ground detection
4. Voltage upper limit
5. Voltage upper limit time
6. Voltage lower limit
7. Voltage lower limit time
8. Frequency upper limit
9. Frequency upper limit time
10. Frequency lower limit
11. Frequency lower limit time
12. Impedance lower limit
13. Internet time
14. Restart time
15. Restart enable

**Note:**
When modifying parameters, you need to pay attention to the unit.

### 5.3.12 Power grid control

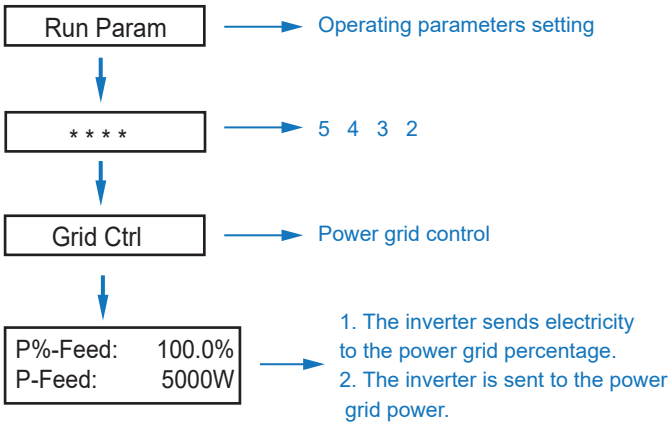


### 5.3.13 Multi-machine in Parallel

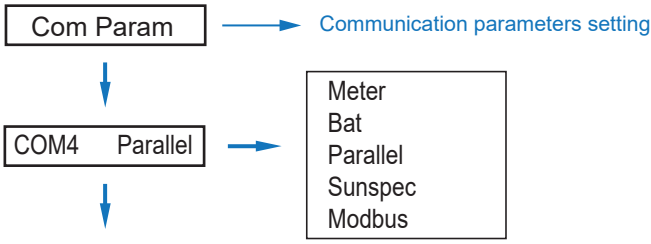

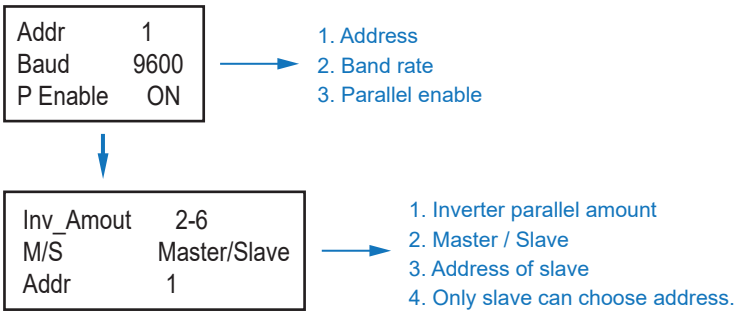


## 5.3.14 Diesel Generator Setting (Diese1 Gen Param)

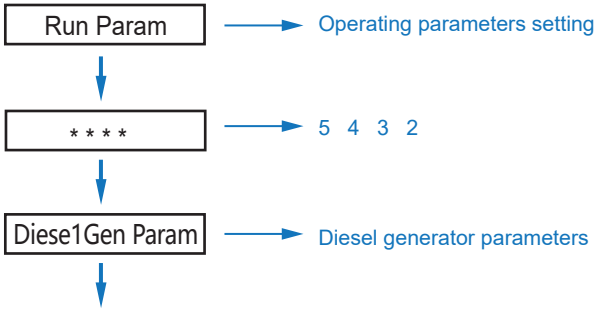

| | |
|---|---|
| Diese1Gen GenEn | ON |
| TimeCtr1Em | ON |
| TimeDelay | 0S |
| StarSoc | 20.0% |
| EndSoc | 80.0% |
| TimOn1 | 00:00 |
| TimOff1 | 00:00 |
| TimOn2 | 00:00 |
| TimOff2 | 00:00 |
| TimOn3 | 00:00 |
| TimOff3 | 00:00 |

1. Diese1Gen GenEn — Diesel generator enable.
2. TimeCtr1Em — Time control enable.
3. TimeDelay — Delay time of diesel generator start working.
4. StarSoc — Battery power percentage when diesel generator start charging the battery.
5. EndSoc — Battery power percentage when diesel generator stop charging the battery.
6. TimOn1 — Diesel generator start time 1.
7. TimOff1 — Diesel generator off time 2.

**Note:**
Diesel generator enable and time control enabled must be on, other wise the diesel generator can not be started.

# 6. Power ON/OFF

Please check the following requirements before testing:

- Installation location is suitable according to Chapter 4.1.3.
- All electrical wires are connected tightly, including PV modules, battery and AC side(Such as the grid side, EPS side, Gen side).
- Earth line and Smart meter/CT line are connected.
- AF-SLP hybrid inverters should be set according to the required local grid standard.
- More information please contact with Afore or distributors.

## 6.1 Power ON

- Turn on DC switch.
- After LCD lighting, hybrid inverter should be set following Chapter 5.3 at the first time.
- When inverter running under normal mode, Running indicator will light up(Ref. to Chapter 5.1).

## 6.2 Power OFF

- Turn off DC switch ( in hybrid inverter) and all extra-breaker.

**Note:**
Hybrid inverter should be restarted after 5 minutes.

## 6.3 Restart

Restart Hybrid inverter, please follow steps as below:
- Shutdown the inverter Ref. to Chapter6.2.
- Start the inverter Ref. to Chapter 6.1.

# 7. Maintenance & Trouble Shooting

## 7.1 Maintenance

Periodically maintenance are necessary, please follow steps as below.
- PV connection: twice a year
- AC connection(Grid and EPS) : twice a year
- Battery connection: twice a year
- Earth connection: twice a year
- Heat sink: clean with dry towel once a year

## 7.2 Trouble Shooting

The fault messages are displayed when fault occurs, please check trouble shooting table and find related solutions.

## Fault Code and Trouble Shooting

| Type of Fault | Code | Name | Description | Recommend Solution |
|---|---|---|---|---|
| PV Fault | A01 | PvConnectFault | PV connection type different from setup | • Check PV modules connection<br>• Check PV Mode setup Ref. Chapter 5.3. |
| | A02 | IsoFault | ISO check among PV panels/ wires and ground is abnormal. | • Check PV modules wires, those wires are soaked or damaged, and then carry out rectification.<br>• if the fault occurs continuously and frequently, please ask help for local distributors. |
| | A03 | PvAfciFault | PV current arcing | • Check PV modules wires and connectors broken or loose connect, and then carry out rectification.<br>• If the fault occurs continuously and frequently, please ask help for local distributors. |
| | A04 | Pv1OverVoltFault | PV Voltage over | • Reconfiguration of PV strings, reduce the PV number of a PV string to reducing inverter PV input voltage.<br>• Suggestion that contacting with local distributors. |
| | A05 | Pv2OverVoltFault | | |
| | A06 | Pv3OverVoltFault | | |
| | A07 | Pv4OverVoltFault | | |
| | A08 | Pv5OverVoltFault | | |
| | A09 | Pv6OverVoltFault | | |
| | A10 | Pv7OverVoltFault | | |
| | A11 | Pv8OverVoltFault | | |
| | A12 | Pv9OverVoltFault | | |
| | A13 | Pv10OverVoltFault | | |
| | A14 | Pv11OverVoltFault | | |
| | A15 | Pv12OverVoltFault | | |
| | A16 | PV1ReverseFault | PV(+) and PV(-) reversed Connection | • Check PV(+) and PV(-) Connect whether reversed or not.<br>• If reversed, make correction. |
| | A17 | PV2ReverseFault | | |
| | A18 | PV3ReverseFault | | |
| | A19 | PV4ReverseFault | | |
| | A20 | PV5ReverseFault | | |
| | A21 | PV6ReverseFault | | |

| Type of Fault | Code | Name | Description | Recommend Solution |
|---|---|---|---|---|
| PV Fault | A22 | PV7ReverseFault | | |
| | A23 | PV8ReverseFault | | |
| | A24 | PV9ReverseFault | | |
| | A25 | PV10ReverseFault | | |
| | A26 | PV11ReverseFault | | |
| | A27 | PV12ReverseFault | | |
| | A33 | Pv1AbnormalFault | PV(+) and PV(-) reversed Connection | • Check PV modules partial occlusion or cells damaged.<br>• Check PV module wires and connectors broken or loose connect, then repair it. |
| | A34 | Pv2AbnormalFault | | |
| | A35 | Pv3AbnormalFault | | |
| | A36 | Pv4AbnormalFault | | |
| | A37 | Pv5AbnormalFault | | |
| | A38 | Pv6AbnormalFault | | |
| | A39 | Pv7AbnormalFault | | |
| | A40 | Pv8AbnormalFault | | |
| | A41 | Pv9AbnormalFault | | |
| | A42 | Pv10AbnormalFault | | |
| | A43 | Pv11AbnormalFault | | |
| | A44 | Pv12AbnormalFault | | |
| | A45 | Pv13AbnormalFault | | |
| | A46 | Pv14AbnormalFault | | |
| | A47 | Pv15AbnormalFault | | |
| | A48 | Pv16AbnormalFault | | |
| | A49 | Pv17AbnormalFault | | |
| | A50 | Pv18AbnormalFault | | |
| | A51 | Pv19AbnormalFault | | |
| | A52 | Pv20AbnormalFault | | |
| | A53 | Pv21AbnormalFault | | |
| | A54 | Pv22AbnormalFault | | |
| | A55 | Pv23AbnormalFault | | |
| | A56 | Pv24AbnormalFault | | |

| Type of Fault | Code | Name | Description | Recommend Solution |
|---|---|---|---|---|
| Battery Fault | B01 | PcsBatOverVoltFault | Battery voltage over or under | • Check inverters connected battery lines and connectors broken or loose connect.<br>• Carry out rectification if broken or loose.<br>• Checking battery voltage is abnormal or not, then maintenance or change new battery. |
| | B02 | PcsBatUnderVoltFault | | |
| | B03 | PcsBatInsOverVoltFaul | | |
| | B04 | PcsBatReversedFault | Bat. (+) and Bat. (-) are reversed. | • Check Bat.(+) and Bat.(-)connect reversed or not.<br>• Make correction If reversed. |
| | B05 | PcsBatConnectFault | Battery wires loose | • Check battery wires and connectors damage or loose connect.<br>• Carry out rectification if break. |
| | B06 | PcsBatComFault | Battery communication abnormal | • Check battery side communication wires damage or loose connect, and then carry out rectification.<br>• Check battery is off or other abnormal, then Mastertenance battery or change new battery. |
| | B07 | PcsBatTempSensorOpen | Battery temperature sensor abnormal | • Check battery temperature sensor and connected wires damage or not , then rectification or change new one. |
| | B08 | PcsBatTempSensorShort | | |
| | B09 | BmsBatSystemFault | All these faults will be detected or reported by battery BMS. | • If specific fault high temperature or low temperature, then should change battery installed environment temperature.<br>• Restart battery, maybe can working as normal.<br>• If this fault occurs continuously and frequently, please ask help for local distributors. |
| | B10 | BmsBatVolOverFault | | |
| | B11 | BmsBatVolUnderFault | | |
| | B12 | BmsCellVolOverFault | | |
| | B13 | BmsCellVolUnderFault | | |
| | B14 | BmsCellVolUnbanceFau | | |
| | B15 | BatChgCurOverFault | | |
| | B16 | BatDChgCurOverFault | | |
| | B17 | BatTemperatureOverFa | | |
| | B18 | BatTemperatureUnderF | | |
| | B19 | CelTemperatureOverFa | | |
| | B20 | CelTemperatureUnderF | | |
| | B21 | BatIsoFault | | |
| | B22 | BatSocLowFault | | |
| | B23 | BmsInterComFault | | |
| | B24 | BatRelayFault | | |

| Type of Fault | Code | Name | Description | Recommend Solution |
|---|---|---|---|---|
| Battery Fault | B25 | BatPreChaFault | | |
| | B26 | BmsBatChgMosFault | | |
| | B27 | BmsBatDChgMosFault | | |
| | B28 | BMSVolOVFault | | |
| | B29 | BMSVolLFault | | |
| | B30 | VolLockOpenFault | | |
| | B31 | VolLockShortFault | | |
| | B32 | ChgRefOVFault | | |
| | C01 | GridLossFault | Grid lost (islanding) | • Inverter will restart automatically when the grid return to normal.<br>• Check inverter connected with grid connectors and cable normal or not. |
| | C02 | GridUnbalanVoltFault | Grid Voltage unbalanced. | • The inverter will restart automatically when the grid three phase return to normal.<br>• Check inverter connected with the grid connectors and wires normal or not.con-nectors and cable normal or not. |
| | C03 | GridInstOverVoltFault | Grid instantaneous voltage over | • The inverter will restart automatically when the grid three phase return to normal.<br>• Contact with local distributor or required grid company adjust protection parameters. |
| | C04 | Grid10MinOverVoltFault | Grid voltage Over by 10 Minutes | • The inverter will restart automatically when the grid three phase return to normal.<br>• Contact with local distributor or required grid company adjust 10 minutes protection voltage parameters. |
| | C05 | GridOverVoltFault | Grid voltage over | • The inverter will restart automatically when the grid three phase return to normal.<br>• Contact with local distributor or required grid company adjust voltage protection parameters. |
| | C06 | GridUnderVoltFault | Grid voltage under | |
| | C07 | GridLineOverVoltFault | Grid line voltage over | |
| | C08 | GridLineUnderVoltFault | Grid line voltage under | |
| | C09 | GridOverFreqFault | Grid Frequency over | • The inverter will restart automatically when the grid three phase return to normal.<br>• Contact with local distributor or required grid company adjust frequency protection parameters. |
| | C10 | GridUnderFreqFault | Grid Frequency under | |

| Type of Fault | Code | Name | Description | Recommend Solution |
|---|---|---|---|---|
| Off-grid Fault | D01 | UpsOverPowerFault | 0ff-grid load over | • Reduce loads.<br>• If sometimes overload, it can be ignored, when generation power enough can be recovery.<br>• If those faults occurs continuously and frequently, please ask help for local distributors. |
| | D02 | GridConflictFault | Grid connected to Back-up terminal | • Check the off-grid port connection correct, disconnect both off-grid and grid ports. |
| | D03 | GenOverVoltFault | GenOverVoltFault | • Adjust generator running parameters, make the output voltage, frequency in allowed range.<br>• If this fault occurs continuously and frequently, please ask help for local distributors. |
| | D04 | GenUnderVoltFault | GenUnderVoltFault | |
| | D05 | GenOverFreqFault | GenOverFreqFault | |
| | D06 | GenUnderFreqFault | GenUnderFreqFault | |
| DC Fault | E01 | Pv1HwOverCurrFault | PV current over, triggered by hardware protection circuit | • Power off, then restart (Ref. Chapter8).<br>• If those faults occurs continuously and frequently, please ask help for local distributors. |
| | E02 | Pv2HwOverCurrFault | | |
| | E03 | Pv3HwOverCurrFault | | |
| | E04 | Pv4HwOverCurrFault | | |
| | E05 | Pv5HwOverCurrFault | | |
| | E06 | Pv6HwOverCurrFault | | |
| | E07 | Pv7HwOverCurrFault | | |
| | E08 | Pv8HwOverCurrFault | | |
| | E09 | Pv9HwOverCurrFault | | |
| | E10 | Pv10HwOverCurrFault | | |
| | E11 | Pv11HwOverCurrFault | | |
| | E12 | Pv12HwOverCurrFault | | |
| | E13 | Pv1SwOverCurrFault | PV current over, triggered by Software logic. | • Power off, power on then restart.<br>• If those faults occurs continuously and frequently, please ask help for local distributors. |
| | E14 | Pv2SwOverCurrFault | | |
| | E15 | Pv3SwOverCurrFault | | |
| | E16 | Pv4SwOverCurrFault | | |
| | E17 | Pv5SwOverCurrFault | | |
| | E18 | Pv6SwOverCurrFault | | |
| | E19 | Pv7SwOverCurrFault | | |
| | E20 | Pv8SwOverCurrFault | | |

| Type of Fault | Code | Name | Description | Recommend Solution |
|---|---|---|---|---|
| DC Fault | E21 | Pv9SwOverCurrFault | | |
| | E22 | Pv10SwOverCurrFault | | |
| | E23 | Pv11SwOverCurrFault | | |
| | E24 | Pv12SwOverCurrFault | | |
| | E33 | Boost1SelfCheck(boost)Fault | PV boost circuit abnormal when self checking | • Power off, then restart (Ref. Chapter8).<br>• If those faults continuously and frequently, please ask help for local distributors. |
| | E34 | Boost2SelfCheck(boost)Fault | | |
| | E35 | Boost3SelfCheck(boost)Fault | | |
| | E36 | Boost4SelfCheck(boost)Fault | | |
| | E37 | Boost5SelfCheck(boost)Fault | | |
| | E38 | Boost6SelfCheck(boost)Fault | | |
| | E39 | Boost7SelfCheck(boost)Fault | | |
| | E40 | Boost8SelfCheck(boost)Fault | | |
| | E41 | Boost9SelfCheck(boost)Fault | | |
| | E42 | Boost10SelfCheck(boost)Fault | | |
| | E43 | Boost11SelfCheck(boost)Fault | | |
| | E44 | Boost12SelfCheck(boost)Fault | | |
| | E45 | BusHwOverVoltFault | Bus voltage over | • Power off, then restart (Ref. Chapter8).<br>• If those faults continuously and frequently, please ask help for local distributors. |
| | E46 | BusHwOverHalfVoltFault | | |
| | E47 | BusSwOverVoltFault | | |
| | E48 | BusSwOverHalfVoltFault | | |
| | E49 | BusSwUnderVoltFault | Bus voltage under as running | |
| | E50 | BusUnbalancedFault | DC Bus voltage unbalanced | |
| | E51 | BusBalBridgeHwOver-CurFault | Bus Controller current over | • Power off, then restart (Ref. Chapter8).<br>• If those faults continuously and frequently, please ask help for local distributors. |
| | E52 | BusBalBridgeSwOver-CurFault | | |
| | E53 | BusBalBridgeSelf-CheckFault | Bus Controller abnormal when self checking | |
| | E54 | BDCHwOverCurrFault | BiDC current over | • Power off, then restart (Ref. Chapter8).<br>• If those faults continuously and frequently, please ask help for local distributors. |
| | E55 | BDCSwOverCurrFault | | |
| | E56 | BDCSelfCheckFault | BiDC abnormal as self checking | |
| | E57 | BDCSwOverVoltFault | BiDC voltage over | |
| | E58 | TransHwOverCurrFault | BiDC current over | |

| Type of Fault | Code | Name | Description | Recommend Solution |
|---|---|---|---|---|
| | E59 | BDCFuseFault | BiDC fuse broken | • Change fuse. |
| | E60 | BDCRelayFault | BiDC relay abnormal | • Power off, then restart (Ref. Chapter8).<br>• If those faults continuously and frequently, please ask help for local distributors. |
| AC Fault | F01 | HwOverFault | All over current/ voltage by protection hardware | • Power off, then restart (Ref. Chapter8).<br>• If those faults occurs continuously and frequently, please ask help for local distributors. |
| | F02 | InvHwOverCurrFault | Ac over current by protection hardware | |
| | F03 | InvROverCurrFault | R phase current over | |
| | F04 | InvSOverCurrFault | S phase current over | |
| | F05 | InvTOverCurrFault | T phase current over | |
| | F06 | GridUnbalanCurrFault | On-grid current unbalanced | |
| | F07 | DcInjOverCurrFault | DC injection current over | |
| | F08 | AcOverLeakCurrFault | Ac side leakage current over | • Check AC insulation and ground wires connect ground is well or not, then repair it.<br>• Power off, then restart (Ref. Chapter8)..<br>• If those fault occurs continuously and frequently, please ask help for local distributors. |
| | F09 | PLLFault | PLL abnormal | • Power off, then restart (Ref. Chapter8).<br>• If those fault occurs continuously and frequently, please ask help for local distributors. |
| | F10 | GridRelayFault | Grid relay abnormal | |
| | F11 | UpsRelayFault | Ups relay abnormal | |
| | F12 | GenRelayFault | Generator relay abnormal | |
| | F13 | Relay4Fault | Relay4 abnormal | |
| | F14 | UpsROverCurrFault | Off-grid output current over | • When off-grid the load start impulse current is over, reduce the start impulse current load.<br>• Power off, then restart (Ref. Chapter8).<br>• If those fault occurs continuously and frequently, please ask help for local distributors. |
| | F15 | UpsSOverCurrFault | | |
| | F16 | UpsTOverCurrFault | | |
| | F17 | GenROverCurrFault | Generator current over | • Check generator output voltage, frequency is stability, and adjust generator.<br>• Power off, then restart(Ref. Chapter8).<br>• If those fault occurs continuously and frequently, please ask help for local distributors. |
| | F18 | GenSOverCurrFault | | |
| | F19 | GenTOverCurrFault | | |
| | F20 | GenReversePowerFault | Active power injected to generator | |

| Type of Fault | Code | Name | Description | Recommend Solution |
|---|---|---|---|---|
| AC Fault | F21 | UpsOverVoltFault | Off-grid output voltage over or under | • Power off, then restart (Ref. Chapter8).<br>• If those faults occurs continuously and frequently, please ask help for local distributors. |
| | F22 | UpsUnderVoltFault | | |
| | F23 | UpsOverFreqFault | Off-grid output frequency over or under | |
| | F24 | UpsUnderFreqFault | | |
| | F25 | DcInjOverVoltFault | Off-grid DC injection voltage over | |
| System Fault | G01 | PV1CurAdChanFault | Sampling hardware abnormal | • Power off, then restart (Ref. Chapter8).<br>• If those faults occurs continuously and frequently, please ask help for local distributors. |
| | G02 | PV2CurAdChanFault | | |
| | G03 | PV3CurAdChanFault | | |
| | G04 | PV4CurAdChanFault | | |
| | G05 | PV5CurAdChanFault | | |
| | G06 | PV6CurAdChanFault | | |
| | G07 | PV7CurAdChanFault | | |
| | G08 | PV8CurAdChanFault | | |
| | G09 | PV9CurAdChanFault | | |
| | G10 | PV10CurAdChanFault | | |
| | G11 | PV11CurAdChanFault | | |
| | G12 | PV12CurAdChanFault | | |
| | G13 | BDCCurrAdChanFault | | |
| | G14 | TransCurAdChanFault | | |
| | G15 | BalBrigCurAdChanFault | | |
| | G16 | RInvCurAdChanFault | | |
| | G17 | SInvCurAdChanFault | | |
| | G18 | TInvCurAdChanFault | | |
| | G19 | RInvDciAdChanFault | | |
| | G20 | SInvDciAdChanFault | | |
| | G21 | TInvDciAdChanFault | | |
| | G22 | LeakCurAdChanFault | | |
| | G23 | VoltRefAdChanFault | | |
| | G24 | UpsRCurAdChanFault | | |

| Type of Fault | Code | Name | Description | Recommend Solution |
|---|---|---|---|---|
| System Fault | G25 | UpsSCurAdChanFault | | |
| | G26 | UpsTCurAdChanFault | | |
| | G27 | GenRCurAdChanFault | | |
| | G28 | GenSCurAdChanFault | | |
| | G29 | GenTCurAdChanFault | | |
| | G30 | UpsRDcvAdChanFault | | |
| | G31 | UpsSDcvAdChanFault | | |
| | G32 | UpsTDcvAdChanFault | | |
| | G37 | TempAdChanFault | All temperature sensors abnormal | • Power off, then restart (Ref. Chapter8).<br>• If those faults occurs continuously and frequently, please ask help for local distributors. |
| | G38 | VoltAdConflictFault | The sample value of PV, battery and BUS voltage inconsistent | |
| | G39 | CPUAdConflictFault | The sample value between master CPU and slaver CPU inconsistent | |
| | G40 | PowerCalcConflictFault | Power value between PV, battery and AC output inconsistent | |
| | G41 | EnvirOverTempFault | Installation environment temperature over or low | • Change or improve the installation environment temperature, make running temperature suitable.<br>• Power off, then restart (Ref. Chapter8).<br>• If those faults occurs continuously and frequently, please ask help for local distributors. |
| | G42 | EnvirLowTempFault | | |
| | G43 | CoolingOverTempFault | Cooling temperature over or low | |
| | G44 | CoolingLowTempFault | | |
| | G45 | OverTemp3Fault | Temperature3 over or low | |
| | G46 | LowTemp3Fault | | |
| | G47 | CpuOverTempFault | CPU temperature over | |
| | G48 | ModelConflictFault | Version conflict with inverter | • Power off, then restart (Ref. Chapter8).<br>• If those faults occurs continuously and frequently, please ask help for local distributors. |
| Inner Warnning | I01 | InterFanWarning | Fan abnormal | • Remove foreign matter logged in fan.<br>• If those faults occurs continuously and frequently, please ask help for local distributors. |
| | I02 | ExterFanWarning | | |
| | I03 | Fan3Warning | | |

| Type of Fault | Code | Name | Description | Recommend Solution |
|---|---|---|---|---|
| Inner Warnning | I04 | EnvirTempAdChan-Warning | Some temperature sensors abnormal | • The warnings are not matter influence.<br>• Power off, then restart (Ref. Chapter8).<br>• If those faults occurs continuously and frequently, please ask help for local distributors. |
| | I05 | CoolingTempAdChan-Warning | | |
| | I06 | Temp3AdChanWarning | | |
| | I07 | ExtFlashComWarning | Flash abnormal | • Power off, then restart (Ref. Chapter8).<br>• If this those faults continuously and frequently, please ask help for local distributors. |
| | I08 | EepromComWarning | Eeprom abnormal | |
| | I09 | SlaveComWarning | Communication between slaver CPU and master CPU abnormal | |
| | I10 | HmiComWarning | HMI abnormal | |
| | I11 | FreqCalcConflictWarning | Frequency value abnormal | |
| | I12 | UnsetModel | Running model is not initial | • Contact with local distributor. |
| Outside Warnning | J01 | MeterComWarning | Meter/CT abnormal | • Check the smart meter model, connection or connectors are correct, any loose.<br>• if abnormal, repair or change.<br>• Power off, then restart (Ref. Chapter8).<br>• If those faults occurs continuously and frequently, please ask help for local distributors. |
| | J02 | MeterConnectWarning | Wires connecting type of meter wrong | • Check Meter/CT connection, installed place, and installed direction.<br>• if abnormal, re-installation.<br>• Power off, then restart (Ref. Chapter8).<br>• If this those faults continuously and frequently, please ask help for local distributors. |
| | J03 | SohWarning | Battery SOH low | • Contact with Battery manufacturer. |
| | J04 | GndAbnormalWarning | Earth impedance over by cable loose and so on | • Check earth line connection or earth connecting impedance.<br>• if abnormal, then adjust it.<br>• Power off, then restart (Ref. Chapter8).<br>• If this those faults continuously and frequently, please ask help for local distributors. |
| | J05 | ParallelComWarning | Communication between master inverter and slaver ones abnormal in parallel mode | • Check parallel connect communication wires damage, connectors loose, connect port correct or not.<br>• if not, then adjust it.<br>• Power off, then restart (Ref. Chapter8).<br>• If this those faults continuously and frequently, please ask help for local distributors. |

# 8. Specifications

| PV Input | AF4K-SLP | AF4.6K-SLP | AF5K-SLP | AF5.5K-SLP | AF6K-SLP |
|---|---|---|---|---|---|
| Max. Input Power (kW) | 6.0 | 6.9 | 7.5 | 8.3 | 9.0 |
| Max. PV Voltage (V) | 550 | | | | |
| MPPT Range (V) | 80 - 500 | | | | |
| Full MPPT Range (V) | 120 - 500 | 130 - 500 | 150 - 500 | 160 - 500 | 170 - 500 |
| Normal Voltage (V) | 360 | | | | |
| Startup Voltage (V) | 100 | | | | |
| Max. Input Current (A) | 18.5 x 2 | | | | |
| Max. Short Current (A) | 26 x 2 | | | | |
| No. of MPP Tracker / No. of PV String | 2 / 2 | | | | |
| **Battery Port** | | | | | |
| Max. Charge/Discharge Power (kW) | 4.0 | 4.6 | 5.0 | 5.5 | 6.0 |
| Max. Charge/Discharge Current (A) | 80 | | | | |
| Battery Normal Voltage (V) | 51.2 | | | | |
| Battery Voltage Range (V) | 40 - 60 | | | | |
| Battery Type | Li-ion / Lead-acid etc. | | | | |
| **AC Grid** | | | | | |
| Max Continuous Current (A) | 19.0 | 22.0 | 23.0 | 26.0 | 28.0 |
| Max Continuous Power (kVA) | 4.0 | 4.6 | 5.0 | 5.5 | 6.0 |
| Nominal Grid Current(A) | 17.4 | 20.0 | 21.8 | 24.0 | 26.1 |
| Nominal Grid Voltage (V) | 198 to 242 @ 220 / 207 to 253 @ 230 | | | | |
| Nominal Grid Frequency (Hz) | 50 / 60 | | | | |
| Power Factor | 0.999 (Adjustable from 0.8 overexcited to 0.8 underexcited) | | | | |
| Current THD (%) | < 3 | | | | |
| **AC Load Output** | | | | | |
| Max Continuous Current (A) | 19.0 | 22.0 | 23.0 | 26.0 | 28.0 |
| Max Continuous Power (kVA) | 4.0 | 4.6 | 5.0 | 5.5 | 6.0 |
| Max Peak Current (A) (10min) | 26.1 | 30 | 32.7 | 36.1 | 39.2 |
| Max Peak Power (kVA) (10min) | 6.0 | 6.9 | 7.5 | 8.3 | 9.0 |
| Nominal AC Current (A) | 17.4 | 20.0 | 21.8 | 24.0 | 26.1 |
| Nominal AC Voltage L-N (V) | 220 / 230 | | | | |
| Nominal AC Frequency (Hz) | 50 / 60 | | | | |
| Switching Time (s) | Seamless | | | | |
| Voltage THD (%) | < 3 | | | | |
| **Efficiency** | | | | | |
| CEC Efficiency (%) | 97.0 | | | | |
| Max. Efficiency (%) | 97.6 | | | | |
| PV to Bat. Efficiency (%) | 98.1 | | | | |
| Bat. between AC Efficiency (%) | 96.8 | | | | |
| **Protection** | | | | | |
| PV Reverse Polarity Protection | Yes | | | | |
| Over Current/Voltage Protection | Yes | | | | |
| Anti-Islanding Protection | Yes | | | | |
| AC Short Circuit Protection | Yes | | | | |
| Residual Current Detection | Yes | | | | |
| Ground Fault Monitoring | Yes | | | | |
| Insulation Resister Detection | Yes | | | | |
| PV Arc Detection | Yes | | | | |
| Enclosure Protect Level | IP65 / NEMA4X | | | | |
| **General Data** | | | | | |
| Dimensions (W x H x D, mm) | 370x 535 x 192 | | | | |
| Weight (kg) | 20.5 | | | | |
| Topology | Transformerless | | | | |
| Cooling | Intelligent Fan | | | | |
| Relatively Humidity | 0 - 100 % | | | | |
| Operating Temperature Range (°C) | - 25 to 60 | | | | |
| Operating Altitude (m) | < 4000 | | | | |
| Noise Emission (dB) | < 25 | | | | |
| Standby Consumption (W) | < 10 | | | | |
| Mounting | Wall Bracket | | | | |
| Communication with RSD | SUNSPEC | | | | |
| Display & Communication Interfaces | LCD, LED, RS485, CAN, Wi-Fi, GPRS, 4G | | | | |
| Certification & Approvals | NRS097, G98/G99, EN50549-1, C10/C11, AS 4777.2, VDE-AR-N4105, VDE0126, IEC62109-1, IEC62109-2 | | | | |
| EMC | EN61000-6-2, EN61000-6-3 | | | | |